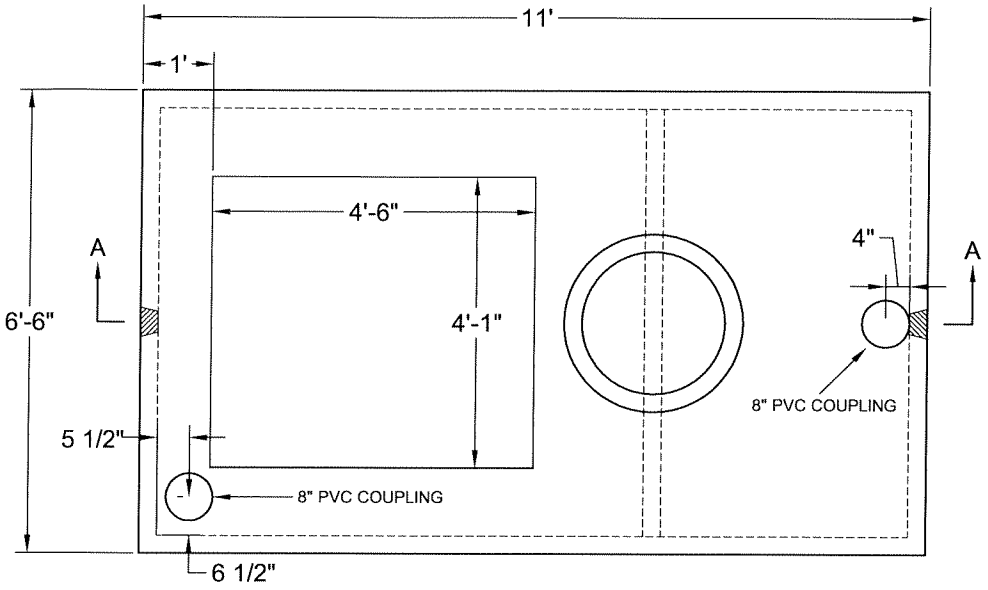

PLAN VIEW

* DIMENSION TO CENTER OF HOLE

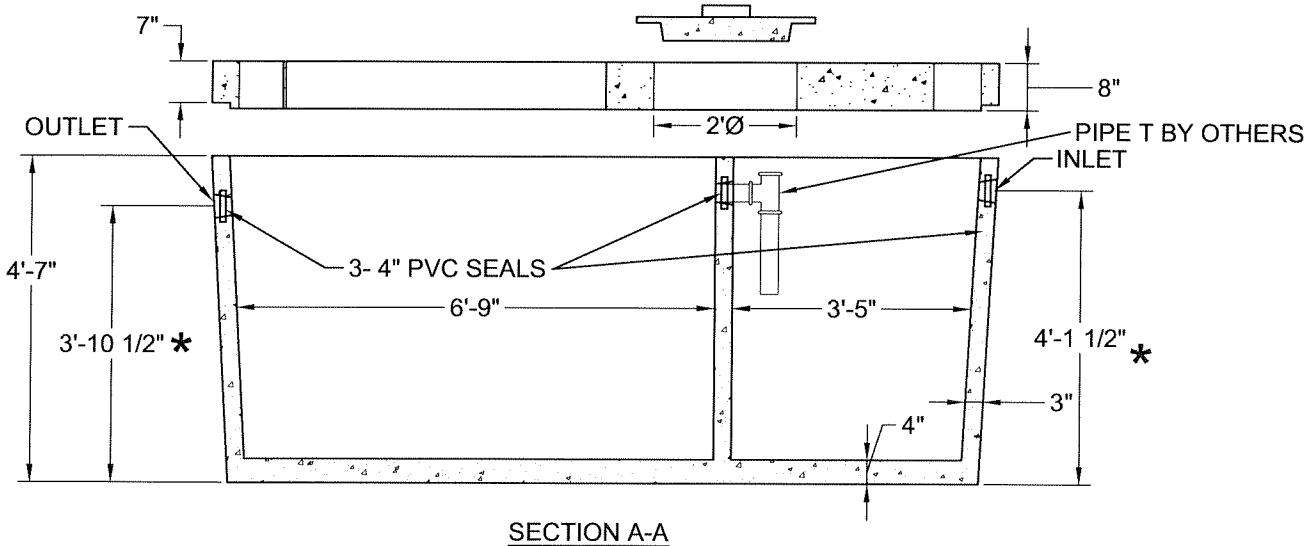

SECTION A-A

1. OVERALL HEIGHT: 5'-2"
2. WEIGHT:TANK: 9600 lbs.
   COVER: 5800 lbs.

GILLESPIE PRECAST LLC
1-800-638-6884
www.gillespieprecast.com

Bio-Microbics - Microfast 0.9L
1500 Gallon Top Seam

DRAWN BY: G. D.	DWG.: 1 of 1
SCALE: 3/8" = 1'-0"	DATE: 7-18-06